2027

Get the best out of every brew

Braumeister:
Stainless steel homebrewing systems



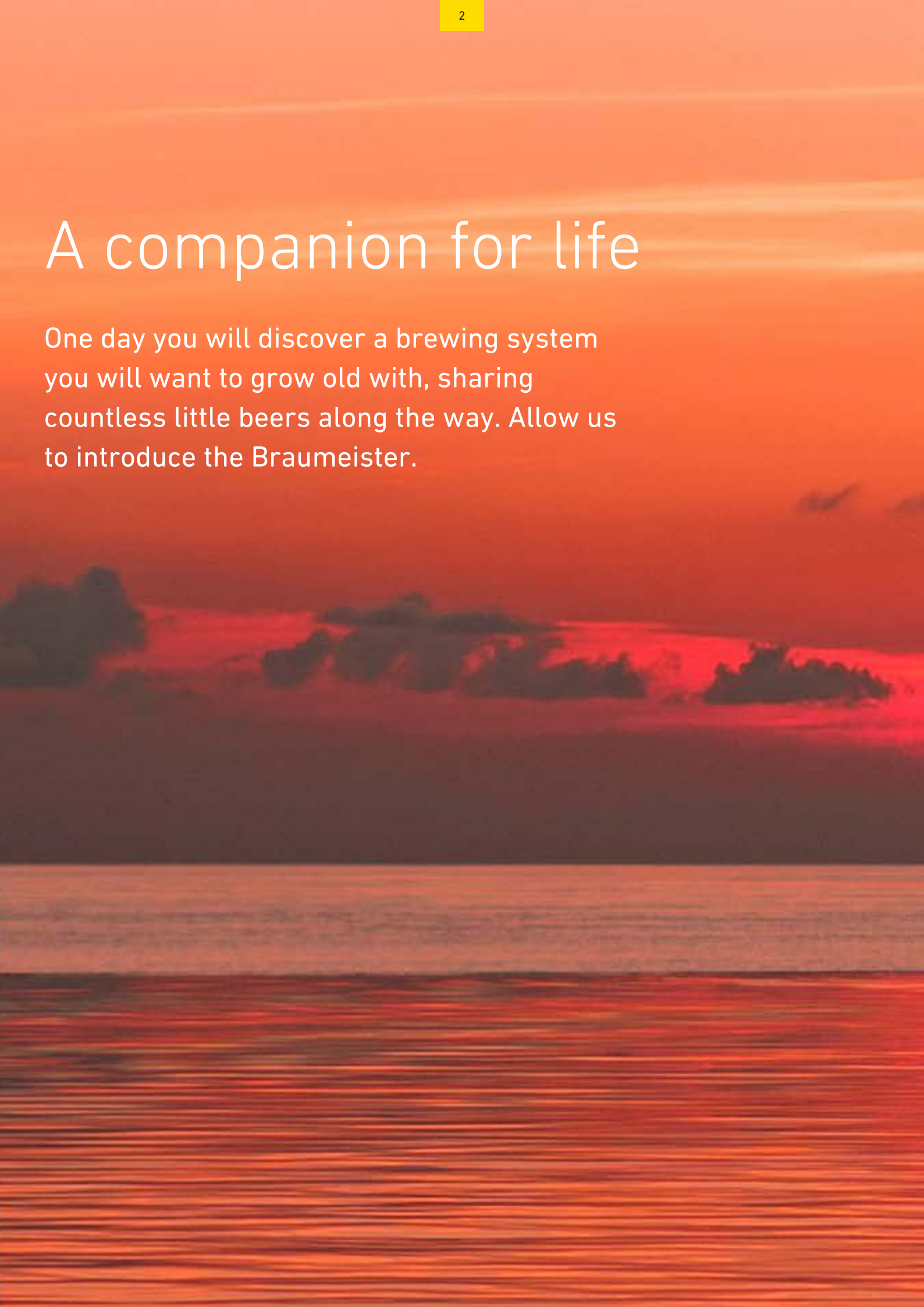

A companion for life

One day you will discover a brewing system you will want to grow old with, sharing countless little beers along the way. Allow us to introduce the Braumeister.



Brewing really can be this easy

The ingenious feature of the Braumeister is its patented malt pipe technology. Instead of using an agitator, the wort is gently pumped upwards through the malt. Nothing scorches and no stirring is needed during the brewing stages. The upward flow against gravity allows the malt to loosen during pump breaks, gently extracting it for a more intense malt aroma. Mashing, lautering, hop boiling and, with the right accessories, even fermentation all take place in one vessel. This makes brewing simple and clean.

The touchscreen controller manages brewing fully automatically, maintaining the exact time and temperature throughout every stage. It can be programmed with preset or individual recipes. The brewing guide leads you through the process, showing the precise ingredients and quantities needed at each step. A practical new feature is the brewing start timer: simply set your chosen time and the Braumeister starts automatically. Brewing has never been easier.

The integrated WiFi module lets you synchronise recipes with your Braumeister and monitor and control brewing over your own wireless network.

Made almost entirely of stainless steel, the Braumeister stands out for its high-quality workmanship - Made in Germany!







Stainless steel hood
A practical aid for filling and vapour extraction.

Filter plates
Coarse and fine filters at both the top and bottom.

Double jacket
Cooling without extra accessories. Ideal for low oxygen brewing.

Temperature sensor
Built into the central rod for more accurate measurement.

Malt pipe
Four pins instead of two for more flexibility when lautering.

Heating element
Never comes into contact with the malt.

Touchscreen control
Fully automatic and easy to use.

Pump
Gently circulates the wort from bottom to top.



Let it brew for you

With its new functions, the new Braumeister makes it even easier to brew the beer you want.

· Touchscreen
· Temperature measured directly in the malt
· Integrated fermentation programme
· New timer function
· Compatible with Tilt Hydrometer
· Multiple languages, with more available


Manuell
P
H
18.0 °C
13:50
Soll: 38.0 °C
18.0°C
38.0 °C
ZURÜCK
P
PUMPE AN
H
HEIZUNG AUS
ZEIT
SPEIDEL
Made in Germany

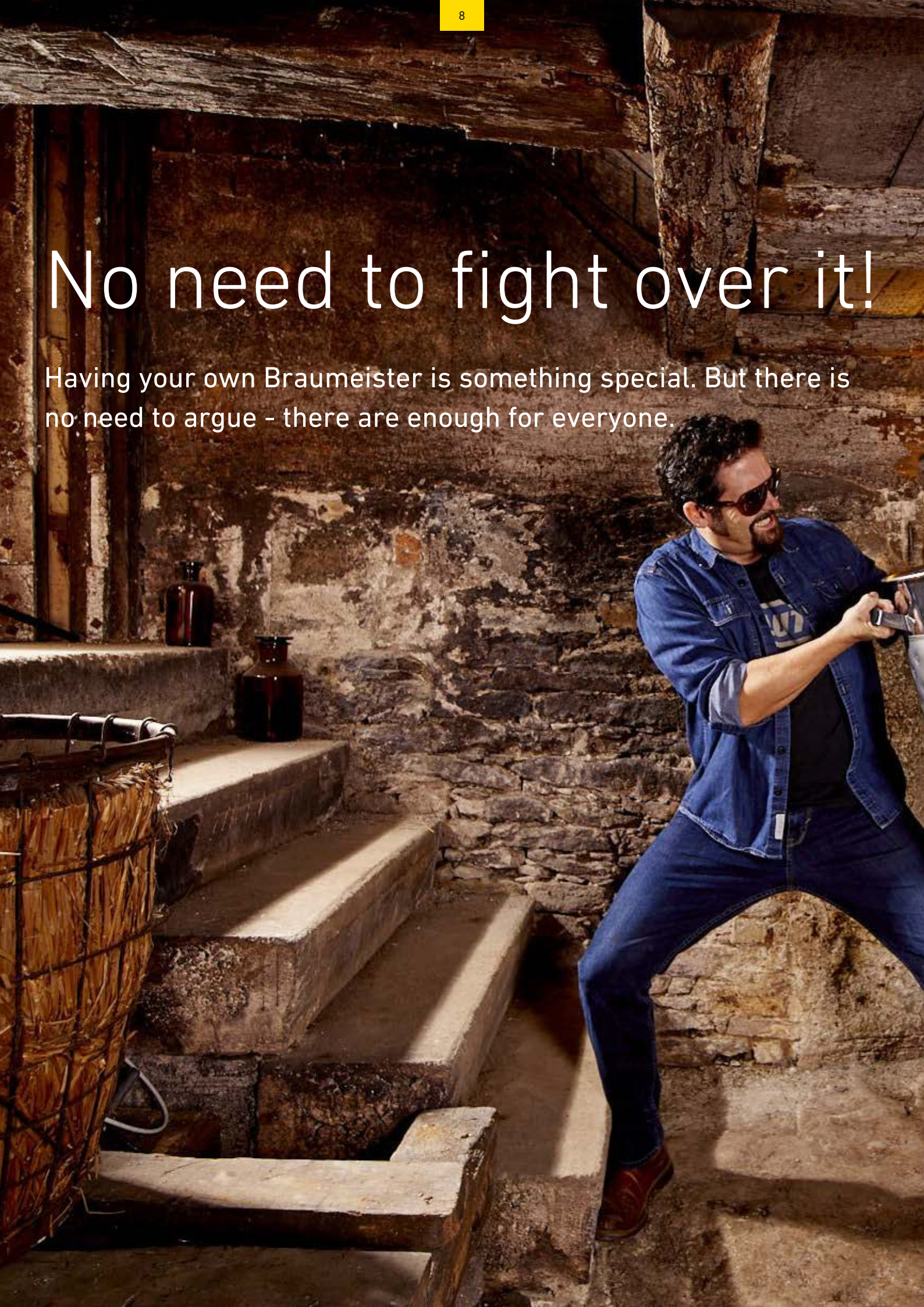

No need to fight over it!

Having your own Braumeister is something special. But there is no need to argue - there are enough for everyone.


BRAUMEISTER


BRAUMEISTER
SPEIDEL

#Braumeister 10 litres



Small, yet a true Braumeister: the 10-litre Braumeister is compact enough for even the smallest kitchen. It still offers all the advantages of a genuine Braumeister: patented malt pipe technology, high-quality workmanship and fully automatic control.

The integrated WiFi module automatically synchronises recipes and installs firmware updates. Your Braumeister stays up to date, and you can even control your brew from the sofa. With the appropriate accessories, you can also use it as a fermentation tank with controlled temperature management.

#BRAUMEISTER 10 LITRES

Capacity	Item no.	Weight	Ship. wt.	Price
l		kg	kg	Euro
10	41010-30	12	15	1,950.00

SPECIFICATIONS #BRAUMEISTER 10 LITRES

· Heating element: 1,200 W
· Pump: 27 W, variable speed
· Power supply: 230 V (min. 10 A fuse)
· Fully automatic brewing control (temperature, time, pump)
· Max. malt quantity: 2.8 kg
· Welded cooling jacket
· Rear cold water connections: 2 x 1" male thread

DIMENSIONS #BRAUMEISTER 10 LITRES

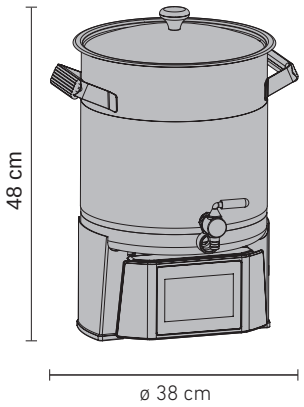

All prices in euros, excluding VAT and shipping


BRAUMEISTER
SPEIDEL
22.3 °C

#Braumeister 20 litres

The Braumeister was developed for both aspiring and experienced homebrewers. Its compact dimensions and ease of use make it ideal for brewing at home.

Even more up to date: the Braumeister now features a new brewing controller and a cooling jacket as standard. The controller brews your individual recipes, guides you through the process and maintains the exact time and temperature at every stage. Temperature is measured directly in the central rod, right in the middle of the malt.

The integrated WiFi module automatically synchronises recipes and installs firmware updates. Your Braumeister stays up to date, and you can even control your brew from the sofa. With the appropriate accessories, you can also use it as a fermentation tank with controlled temperature management.



#BRAUMEISTER 20 LITRES

Capacity l	Item no.	Weight kg	Ship. wt. kg	Price Euro
20	47070-30	19	24	2,090.00

SPECIFICATIONS #BRAUMEISTER 20 LITRES

· Heating element: 2,000 W
· Pump: 27 W, variable speed
· Power supply: 230 V (min. 10 A fuse)
· Fully automatic brewing control (temperature, time, pump)
· Max. malt quantity: 6 kg
· Welded cooling jacket
· Rear cold water connections: 2 x 1" male thread
· Additional 3/4" drain valve in the base
· Ideal for low oxygen brewing

DIMENSIONS #BRAUMEISTER 20 LITRES

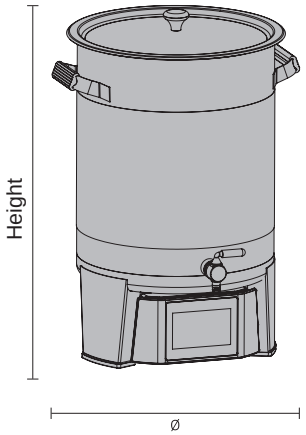

Model l	Height cm	ø cm	Box dimensions l x w x h cm
20	60	40	74 x 60 x 61

All prices in euros, excluding VAT and shipping


BRAUMEISTER

#Braumeister 50 litres

For those who want to brew more beer, the 50-litre Braumeister is the answer. This model also includes the new controller, cooling jacket and WiFi module as standard. The high-quality stainless steel construction and extensive range of accessories remain just as impressive.

The double jacket fitted as standard replaces previously needed accessories and gives you even more freedom when brewing. An additional drain valve in the base of the vessel allows dirty water to be drained, making cleaning much easier.

The new timer function offers even greater flexibility for manual operations such as heating and pump breaks. With suitable accessories, the Braumeister can also be used as a fermentation tank with controlled temperature management.



#BRAUMEISTER 50 LITRES

Capacity l	Item no.	Weight kg	Ship. wt. kg	Price Euro
50	45050-30	30	37	2,550.00

SPECIFICATIONS #BRAUMEISTER 50 LITRES

· Heating element: 3,200 W
· Pump: 27 W, variable speed
· Power supply: 230 V (min. 16 A fuse)
· Fully automatic brewing control (temperature, time, pump)
· Max. malt quantity: 13 kg
· Welded cooling jacket
· Rear cold water connections: 2 x 1" male thread
· Additional 3/4" drain valve in the base
· Ideal for low oxygen brewing

DIMENSIONS #BRAUMEISTER 50 LITRES

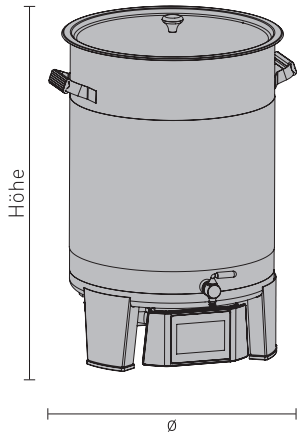

Model l	Height cm	ø cm	Box dimensions l x w x h cm
50	70	50	74 x 60 x 61

All prices in euros, excluding VAT and shipping



Built to the German Purity Law

This is no misprint. Made in Germany applies to the construction of the Braumeister too. Every single component matters, so we never cut corners on materials, even where nobody looks. That is the foundation of Speidel's renowned quality.





#Braumeister 10 litres

Height (cm)	48
Diameter (cm)	30
Weight (kg)	12
Shipping weight (kg)	15
Box dimensions (l × w × h cm)	60 × 40 × 50
Heating element (W)	1,200
Pump (W)	27 W, variable speed
Power supply	230 V / 10 Amp
Wall thickness (mm)	1.5
Material	Stainless steel 1.4301 (V2A / AISI 304)
Surface finish	Illd (2R)
Malt quantity (kg)	2.8
Suggested location	Kitchen
Batch size	10 l finished beer
Extras	Cooling jacket, water connection
Item number	41010-30

Price (Euro)	1,950.00

All prices in euros, excluding VAT and shipping





#Braumeister 20 litres	#Braumeister 50 litres
60	70
40	50
19	30
24	37
74 × 60 × 61	74 × 60 × 61
2,000	3,200
27 W, variable speed	27 W, variable speed
230 V / 10 Amp	230 V / 16 Amp
1.5	1.5
Stainless steel 1.4301 (V2A / AISI 304)	Stainless steel 1.4301 (V2A / AISI 304)
IIId (2R)	IIId (2R)
6	13
Kitchen / hobby room	Hobby room / brew room
20 l finished beer	50 l finished beer
Cooling jacket, water connection, additional drain valve	Cooling jacket, water connection, additional drain valve
47070-30	45050-30
2,090.00	**2,550.00**

All prices in euros, excluding VAT and shipping

#Braumeister 100 litres

The 100-litre Braumeister combines a larger brewing volume with the easy handling of the small Braumeisters. Three individual malt pipes can be lifted out one after another. No crane or additional lifting equipment is required.

The stainless steel frame on castors provides flexible positioning. The entire brewing process can also be carried out by one person.

The controller is easy to reach and adjustable in height and angle. It guides you through your individual recipes and maintains the exact time and temperature throughout every brewing stage.

Recipes can be synchronised and updates downloaded via WiFi. The supplied pumping device makes transfer to the fermentation tank easier. The convenient working height also simplifies cleaning.

MODEL #BRAUMEISTER 100 LITRES

Capacity	Item no.	Weight	Ship. wt.	Price
l		kg	kg	Euro
100	45100	77	102	5,900.00







Three individually removable malt pipes

DIMENSIONS #BRAUMEISTER 100 LITRES



Model	Height	ø
l	cm	cm
100	110	90

SPECIFICATIONS #BRAUMEISTER 100 LITRES

· Heating elements: 3 x 2,000 W
· Pumps: 3 x 27 W, variable speed
· Power supply: 400 V (min. 16 A fuse)
· Total connected load: 7 kW
· Batch size: 100 litres of finished beer
· Weight: 77 kg
· Fully automatic brewing control (temperature, time, pump)
· 5-inch touchscreen with integrated WiFi
· Controller enclosure rated IP65
· Cooling jacket, pumping device and frame on castors included

THREE MALT PIPES, EASY BREWING

The malt is divided between three manageable malt pipes. Each can be lifted out separately, allowing you to brew 100 litres without a crane.

All prices in euros, excluding VAT and shipping





For everyone who loves beer

The large Braumeisters are ideal for those whose brewing has grown beyond a hobby, but who still want to brew their own distinctive beer.

#Braumeister 200 litres

Some dreams can come true! Become independent and brew your guests a distinctive, individual beer. The touchscreen makes the Braumeister even easier to operate, and a new pressure sensor controls the pump. The new timer saves time, for example by heating the brewing water early in the morning. You still enjoy the proven Braumeister concept of a compact brewing system: brewing, lautering, hop boiling, whirlpooling and cooling all take place in one vessel.

The system is mobile, easy to move and requires very little space. This makes it ideal for restaurants, pubs, events or brewing clubs. Its low purchase cost and low cost per litre ensure a rapid return on investment.

MODEL #BRAUMEISTER 200 LITRES

Capacity l	Item no.	Weight kg	Shipping weight kg	Price Euro
200	45200-20	150	200	13,900.00

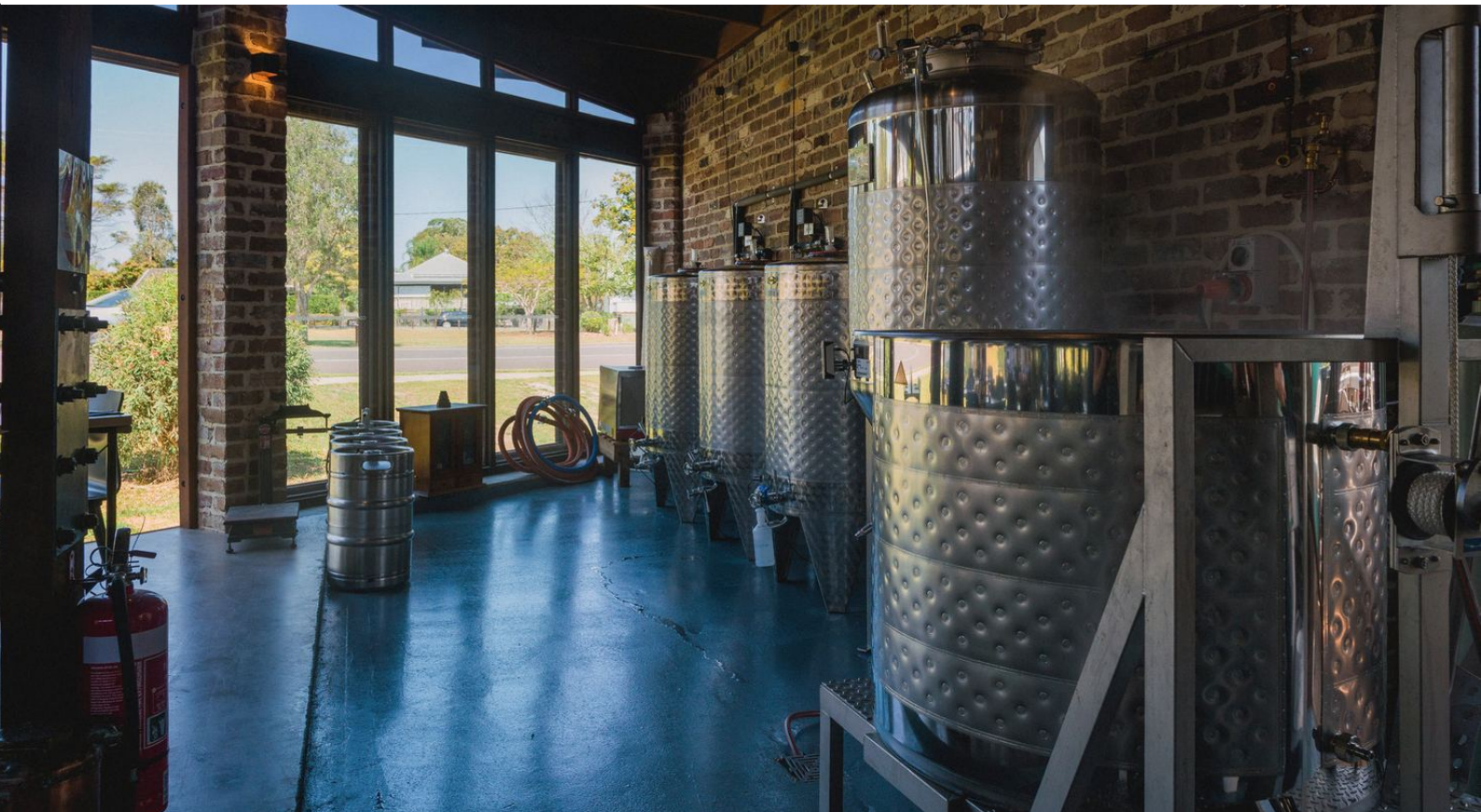



DIMENSIONS #BRAUMEISTER 200 LITRES

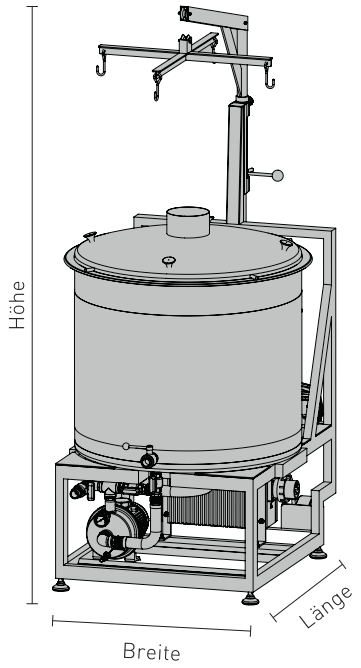

Capacity	Length	Width	Height	Wooden crate
l	cm	cm	cm	l x w x h cm
200	136	90	210	132 x 100 x 175

SPECIFICATIONS #BRAUMEISTER 200 LITRES

· Heating elements: 3 x 3,000 W
· Pump: 370 W
· Power supply: 400 V (min. 16 A fuse in star, min. 32 A in delta)
· Total connected load: 10 kW
· Cooling: 1.3 m2 jacket area; with ice water and whirlpool, approx. 50 min to 25 °C
· Fully automatic brewing control (temperature, time, pump)
· New Braumeister controller with touchscreen
· Pressure sensor in the pressure line for pump control by pressure or speed
· Domed lid with DN 150 vapour extraction connection and hop addition opening
· Max. malt quantity: 42 kg

All prices in euros, excluding VAT and shipping

#Braumeister 500 litres

Brewing with the 500-litre Braumeister is just as easy as with its smaller counterpart. The new touchscreen simplifies operation. A sensor in the pressure line now allows pump control by pressure as well as speed. As before, the fully automatic controller brews your individual recipes, keeping the exact time and temperature throughout every stage. The integrated timer saves time, for example by heating your brewing water early in the morning.

The Braumeister is available with a built-in lifting device or as a light version without a crane. On the light model, the malt pipe is lifted using lifting equipment provided on site.

The light version requires less floor space and remains mobile on castors. Its heating, pump, controller and cooling jacket match the version with a crane.

MODEL #BRAUMEISTER 500 LITRES

Capacity	Item no.	Weight	Ship. wt.	Price
l		kg	kg	Euro
500	46500-20	380	500	28,500.00
500 light	46500-30	280	-	20,900.00





#Braumeister 500 litres



#Braumeister 500 litres light

DIMENSIONS #BRAUMEISTER 500 LITRES

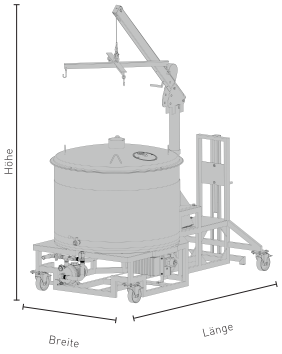

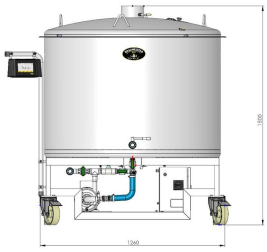

With crane | light

Version	Length cm	Width cm	Height cm
With crane	253	130	277
light	120	126	150

Wooden crate, version with crane

245 x 135 x 141 cm (L x W x H)

For the light version, provide lifting equipment on site with sufficient lifting height.

SPECIFICATIONS FOR BOTH VERSIONS

· Heating elements: 6 x 3,000 W
· Pump: 370 W
· Power supply: 400 V (min. 32 A fuse in star, min. 63 A in delta)
· Total connected load: 20 kW
· Cooling: 1.8 m2 jacket area
· Fully automatic brewing control (temperature, time, pump)
· Touchscreen with WiFi and timer function
· Pressure sensor in the pressure line for pump control by pressure or speed
· Domed lid with DN 150 vapour extraction connection and hop addition opening
· Max. malt quantity: 120 kg

BRAUMEISTER 500 LITRES UPGRADE



Additional boiler for 500 to 600 l of wort.
Item no. 46511, price on request.

All prices in euros, excluding VAT and shipping

#Braumeister 1,000 litres

In response to many customer requests, we have developed the 1,000-litre Braumeister. It is ideal for anyone who wants to brew even more beer. The new touchscreen simplifies operation. A sensor in the pressure line allows pump control by pressure as well as speed. Even for a 1,000-litre batch, brewing remains as easy as with the other large Braumeisters. The integrated timer also makes brewing easier, for example by heating the brewing water early in the morning.

The Braumeister is available with a built-in lifting device or as a light version without a crane. On the light model, the malt pipe is lifted using lifting equipment provided on site.

The light version requires less floor space and remains mobile on castors. Its heating, pump, controller and cooling jacket match the version with a crane.

MODEL #BRAUMEISTER 1,000 LITRES

Capacity l	Item no.	Weight kg	Ship. wt. kg	Price Euro
1,000	41000-20	850	980	42,000.00
1,000 light	41000-30	475	310	28,500.00





#Braumeister 1,000 litres



#Braumeister 1,000 litres light

DIMENSIONS #BRAUMEISTER 1,000 LITRES

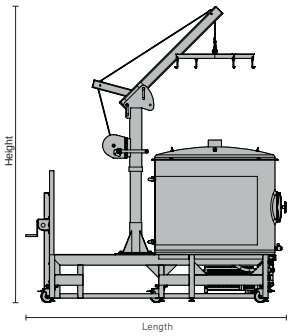



With crane | light

Version	Length cm	Width cm	Height cm
With crane	305	180	345
light	148	148	180

Wooden crate, version with crane

310 x 190 x 195 cm (L x W x H)

For the light version, provide lifting equipment on site with sufficient lifting height.

SPECIFICATIONS FOR BOTH VERSIONS

· Heating elements: 12 x 3,000 W
· Pump: 370 W
· Power supply: 400 V (min. 63 A fuse in star; delta connection is not possible)
· Total connected load: 38 kW
· Cooling: 2.56 m2 jacket area
· Fully automatic brewing control (temperature, time, pump)
· Touchscreen with WiFi and timer function
· Pressure sensor in the pressure line for pump control by pressure or speed
· Domed lid with DN 150 vapour extraction connection and hop addition opening
· Max. malt quantity: 225 kg

BATCH SIZE AND COOLING

Batch size: 1,000 litres of finished beer (standard beer), approx. 1,200 litres of wort.

An additional plate heat exchanger is recommended for cooling.

All prices in euros, excluding VAT and shipping





	#Braumeister 200 litres	#Braumeister 500 litres
Height (cm)	210	277
Length (cm)	136	253
Width (cm)	90	130
Weight (kg)	150	380
Shipping weight (kg)	200	500
Heating element (W)	3 x 3,000	6 x 3,000
Pump (W)	370	370
Power supply	400 V / 16 A	400 V / 32 A
Connected load (kW)	10	20
Wall thickness (mm)	1.5	1.5
Material	Stainless steel 1.4301	Stainless steel 1.4301
Surface finish	IIId (2R)	IIId (2R)
Malt quantity (kg)	42	120
Suggested location	Brewery	Brewery
Batch size	200 l finished beer	500 l finished beer
Item number	45200-20	46500-20
Price (€)	**13,900.00**	**28,500.00**

Material: V2A / AISI 304.

All prices in euros, excluding VAT and shipping







#Braumeister 500 litres light	#Braumeister 1,000 litres	#Braumeister 1,000 litres light
150	345	180
120	305	148
126	180	148
280	850	475
-	980	-
6 x 3,000	12 x 3,000	12 x 3,000
370	370	370
400 V / 32 A	400 V / 63 A	400 V / 63 A
20	38	38
1.5	2.0	2.0
Stainless steel 1.4301	Stainless steel 1.4301	Stainless steel 1.4301
IIId (2R)	IIId (2R)	IIId (2R)
120	225	225
Brewery	Brewery	Brewery
500 l finished beer	1,000 l finished beer	1,000 l finished beer
46500-30	41000-20	41000-30
20,900.00	**42,000.00**	**28,500.00**

The light version requires lifting equipment provided on site.

All prices in euros, excluding VAT and shipping

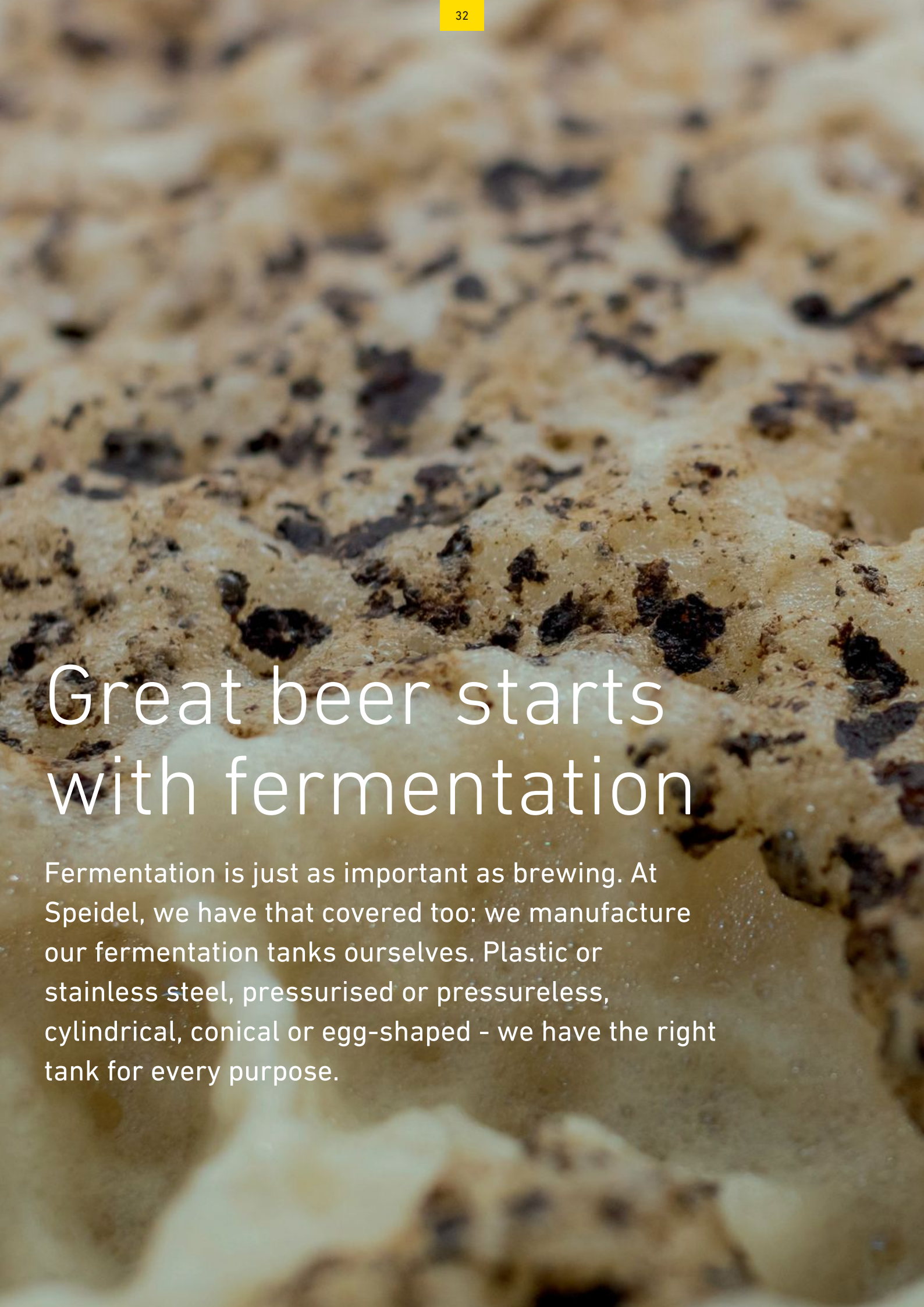

Great beer starts with fermentation

Fermentation is just as important as brewing. At Speidel, we have that covered too: we manufacture our fermentation tanks ourselves. Plastic or stainless steel, pressurised or pressureless, cylindrical, conical or egg-shaped - we have the right tank for every purpose.



Fermentation barrels and Fermenteggs



Tap and airlock not included

PLASTIC FERMENTATION BARRELS

Product	Item no.	Price Euro
Fermentation barrel 12 litres	21047	27.50
Fermentation barrel 20 litres	21052	34.00
Fermentation barrel 30 litres	21006	38.00
Fermentation barrel 60 litres	21007	66.00
Fermentation barrel 120 litres	21008	92.00





UNIVERSAL FERMENTATION BARREL

Product	Item no.	Price Euro
Universal barrel 15 litres	UF-028-Var 0001	185.00
Universal barrel 30 litres	UF-035-Var 0005	219.00
Universal barrel 60 litres	UF-035-Var 0006	242.00
Universal barrel 120 litres	UF-044-Var 0003	315.00
With cooling jacket		
Universal barrel 15 litres	UF-028-Var 0003	439.00
Universal barrel 30 litres	UF-035-Var 0007	475.00
Universal barrel 60 litres	UF-035-Var 0009	538.00

Neoprene jacket for Universal barrel: page 58





· Kellermeister is a conical tank, ideal for pressureless fermentation
· Its special design allows yeast to settle in the cone, where it can be harvested and reused
· The racking outlet lets you draw off clear fermented beer
· The lid with a liquid seal acts as an airlock; no separate airlock is required
· Food-grade polyethylene with a smooth inner surface for easy cleaning
· Racking and bottom outlets: 3/4" female thread
· Includes 2 taps
· Includes thermometer

SPEIDEL'S KELLERMEISTER

Product	Item no.	Price Euro
Kellermeister 30 litres	77367	265.00
Kellermeister 65 litres	77368	310.00
Kellermeister 120 litres	77369	385.00



Tap not included

· Suitable for fermenting wine, beer and cider
· Made of food-grade PE
· Wine, cider and beer can circulate freely during fermentation and storage
· More spontaneous fermentation, producing more complex, delicate wines and beers

· The oxygen permeability of the food-grade plastic allows a steady oxygen transfer, creating ideal conditions for fermentation and maturation
· The smooth inner surface is easy to clean after fermentation
· 60 litres: 2 x 3/4" female-thread outlets
· 250 litres and above: 2 x 1" female-thread outlets

Shape based on the "golden ratio"

FERMENTEGG

Product	Width cm	Height cm	Item no.	Price Euro
Fermentegg 60 litres	48	79	21090	325.00
Fermentegg 250 litres	76	120	21070	445.00
Fermentegg 600 litres	103	157	21080	715.00

All prices in euros, excluding VAT and shipping



Jacketed stainless steel fermenters

· The Speidel stainless steel fermenter is recommended for smaller quantities of beer
· The special 3D inner surface makes cleaning easier
· For bottom-fermented beers, the cooling jacket is ready for connection to a cooling unit
· Stable and secure on three legs
· Racking outlet: 3/4" female thread
· Bottom outlet: 3/4" female thread
· Jacket: 2 x 1" male thread
· DN 10 connection with blank cap for a temperature sensor thermowell
· With cooling jacket
· Lid drilled for an airlock

Tank accessories
See page 55

SMALL STAINLESS STEEL FERMENTERS (PRESSURELESS)

Product	ø cm	Height cm	Item no.	Price Euro
Stainless steel fermenter 60 litres	44	90	FD-044-S Var 0019	750.00
Stainless steel fermenter 120 litres	44	127	FD-044-S Var 0020	850.00





· The Speidel stainless steel fermenter is recommended for larger quantities of beer
· The special 3D inner surface makes cleaning easier
· For bottom-fermented beers, the cooling jacket is ready for connection to a cooling unit
· Stable and secure on three legs
· Racking outlet: 1" male thread
· Bottom outlet: 1" male thread
· Jacket: 2 x 1" male thread
· DN 10 connection with blank cap for a temperature sensor thermowell
· Cooling jacket
· Lid drilled for an airlock

LARGE SS FERMENTERS (PRESSURELESS)

Product	ø cm	Height cm	Item no.	Price Euro
Stainless steel fermenter 240 litres	55	152.4	FD-055-S Var 0047	940.00
Stainless steel fermenter 525 litres	82	146.6	FD-082-S Var 0067	1,320.00
Stainless steel fermenter 625 litres	82	166.1	FD-082-S Var 0068	1,420.00



· The Speidel stainless steel conical fermenter is recommended for smaller quantities of beer
· The special 3D inner surface makes cleaning easier
· For bottom-fermented beers, the cooling jacket is ready for connection to a cooling unit
· Stable and secure on three legs
· Racking outlet: 3/4" female thread
· Bottom outlet: 3/4" female thread
· Sample connection: DN 10 DIN 11851
· Jacket: 2 x 1" male thread
· DN 10 connection with blank cap for a temperature sensor thermowell
· With cooling jacket
· Lid drilled for an airlock
· 60° conical bottom

Tank accessories
See page 55

SMALL CONICAL STAINLESS STEEL FERMENTERS (PRESSURELESS)

Product	ø cm	Height cm	Item no.	Price Euro
Stainless steel conical tank 30 litres	35	83	FD-035-S Var 0002	790.00
Stainless steel conical tank 60 litres	35	109	FD-035-S Var 0001	875.00

Stainless steel pressure tanks

· For maturation, or fermentation and maturation in conical tanks, of larger quantities of beer, choose a Speidel stainless steel pressure tank rated up to 1.2 bar / 2.5 bar
· The 3D inner surface makes cleaning easier
· Cooling jacket on the tank cylinder for fermenting and maturing bottom-fermented beers outside a cold room
· Manufactured to Pressure Equipment Directive 2014/68/EU, including TÜV inspection
· Domed top with DN 400 pressure dome
· Safety valve fitted on the top
· Tank identification plate
· Multifunction connection: DN 25 DIN 11851 fitting welded to the top for a T-adapter connecting a CO2 valve and pressure regulator, or a DN 10 spray head holder for cleaning
· Sample connection: DN 10 DIN 11851
· Welded temperature measuring connection: DN 10 DIN 11851
· Racking outlet: 1" male thread
· Bottom outlet: 1" male thread
· Jacket: 2 x 1" male thread
· Tank with 60° cone or dished bottom

Complete tank sets are available in our tank configuration leaflet and online shop.





STAINLESS STEEL PRESSURE TANK

Product	ø cm	Height cm	Item no.	Price Euro
SS pressure tank 60 l 1.2 bar	35	100	FD-035-S Var 0013	2,720.00
SS pressure tank 60 l 2.5 bar	35	100	FD-035-S Var 0012	2,850.00
SS pressure tank 120 l 1.2 bar	44	125	FD-044-S Var 0050	3,150.00
SS pressure tank 120 l 2.5 bar	44	125	FD-044-S Var 0049	3,250.00
SS pressure tank 240 l 1.2 bar	55	147	FD-055-S Var 0045	3,480.00
SS pressure tank 240 l 2.5 bar	55	147	FD-055-S Var 0082	4,180.00
SS pressure tank 625 l 1.2 bar	82	174	FD-082-S Var 0064	4,210.00
SS pressure tank 625 l 2.5 bar	82	174	FD-082-S Var 0113	4,970.00
SS pressure tank 1,150 l 1.2 bar	100	222	FD-100-S Var 0001	6,120.00
SS pressure tank 1,150 l 2.5 bar	100	222	FD-100-S Var 0002	6,540.00

Illustrations show optional accessories.



CONICAL STAINLESS STEEL PRESSURE TANK

Product	ø cm	Height cm	Item no.	Price Euro
Conical SS pressure tank 60 l 1.2 bar	35	120	FD-035-S Var 0011	2,860.00
Conical SS pressure tank 60 l 2.5 bar	35	120	FD-035-S Var 0008	2,990.00
Conical SS pressure tank 120 l 1.2 bar	44	140	FD-044-S Var 0048	3,250.00
Conical SS pressure tank 120 l 2.5 bar	44	150	FD-044-S Var 0054	3,410.00
Conical SS pressure tank 240 l 1.2 bar	55	175	FD-055-S Var 0043	3,620.00
Conical SS pressure tank 240 l 2.5 bar	55	175	FD-055-S Var 0083	4,350.00
Conical SS pressure tank 625 l 1.2 bar	82	215	FD-082-S Var 0063	4,620.00
Conical SS pressure tank 625 l 2.5 bar	82	215	FD-082-S Var 0114	5,310.00
Conical SS pressure tank 1,200 l 1.2 bar	100	270	FD-100-S Var 0003	7,200.00
Conical SS pressure tank 1,200 l 2.5 bar	100	270	FD-100-S Var 0004	7,850.00

The conical tank is also available pressureless on request.
Illustrations show optional accessories.



SURCHARGE FOR JACKET INSULATION

Product	Price Euro
Jacket insulation	
· 10 mm Armaflex insulation on stainless steel sheet, fitted around the tank	
· Only available when ordered with the tank	
Stainless steel pressure tank FD-035 60 l	310.00
Stainless steel pressure tank DF-044 120 l	350.00
Stainless steel pressure tank FD-055 240 l	420.00
Stainless steel pressure tank FD-082 625 l	480.00
Stainless steel pressure tank FD-100 1,200 l	650.00

Neoprene jackets for conical pressure tanks
See page 60

For every beer lover

We have the right recipe for every taste, whether pilsner, wheat beer or IPA. Simply synchronise your favourite recipe with your Braumeister using MySpeidel and brew your favourite beer.




SUDWERKSTATT

MySpeidel.com

Everything is more fun when you can share it. Our online platform MySpeidel is a digital playground for everyone interested in brewing with Speidel's Braumeister.

Use this portal to create, save and share your favourite recipes. Every Braumeister customer has a personal login. You can also manage several devices, such as the Braumeister and GÄRSPUNDmobil, via myspeidel.com.

The new Braumeister already has an integrated WiFi module. It lets you synchronise recipes, monitor brewing and control the process. Even from your sofa, you will know what is happening in the brewing kitchen.

Register now at www.myspeidel.com

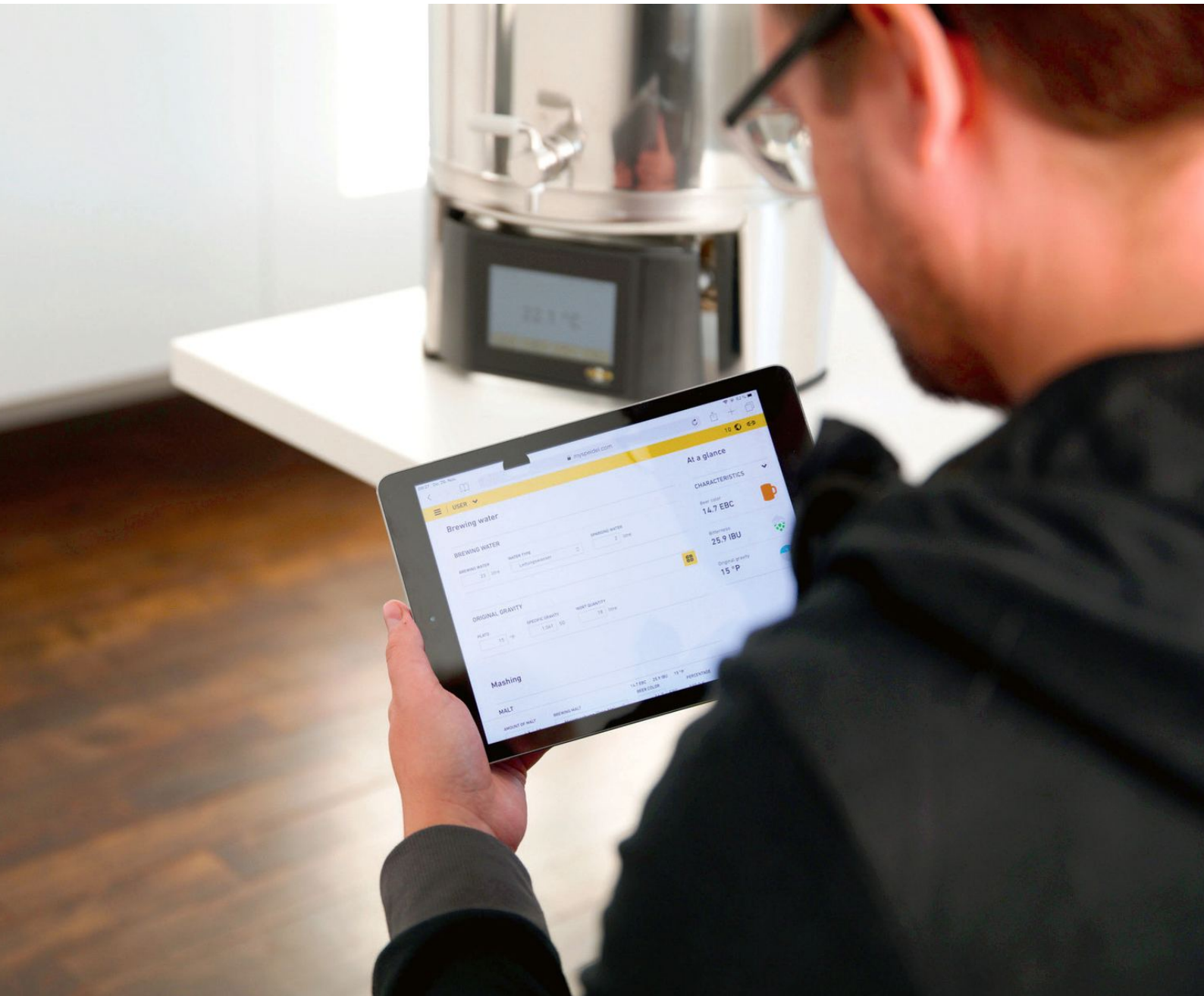

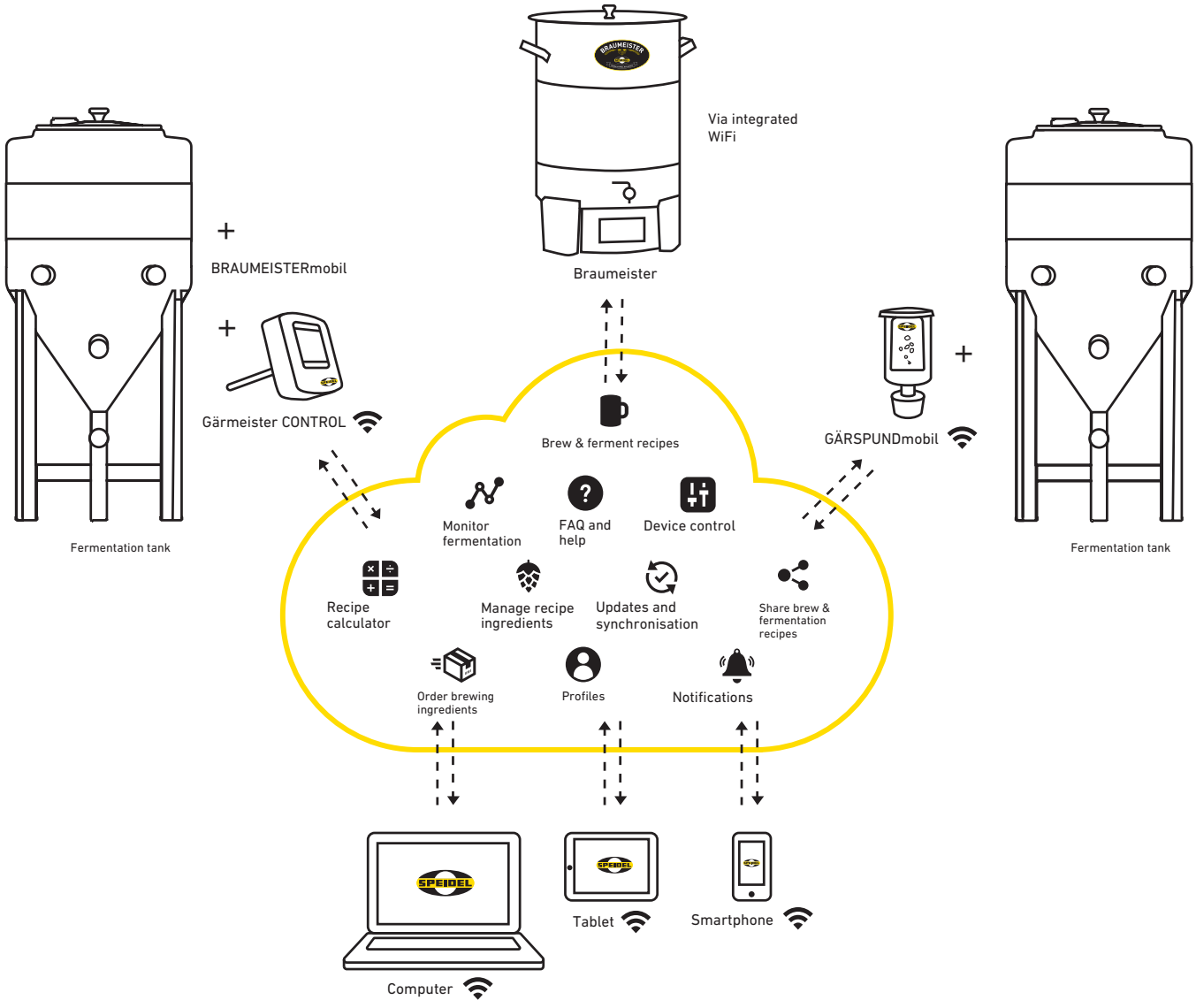
Via integrated WiFi
Braumeister
BRAUMEISTERmobil
Gärmeister CONTROL
Fermentation tank
GÄRSPUNDmobil
Fermentation tank
Brew & ferment recipes
Monitor fermentation
FAQ and help
Device control
Recipe calculator
Manage recipe ingredients
Updates and synchronisation
Share brew & fermentation recipes
Order brewing ingredients
Profiles
Notifications
Computer
Tablet
Smartphone

Convenient fermentation monitoring

Fermentation can be monitored remotely, just like brewing. GÄRSPUNDmobil measures fermentation activity by counting airlock bubbles and measuring temperature, then sends the data via WiFi to your customer portal at myspeidel.com. The fermentation and temperature curves let you monitor and analyse the process and more accurately predict and plan bottling time.

GÄRSPUNDmobil is the perfect accessory for getting the most from your brewing. Its data helps you understand the relationship between fermentation, temperature and flavour, so you can optimise the process and improve your beer step by step to suit your taste. A temperature sensor cable, cable feed-through plug with airlock and mini-USB to USB cable are included.

Gärmeister CONTROL provides professional fermentation control. It is the ideal single-tank controller for a Speidel stainless steel fermenter with cooling jacket and temperature sensor thermowell. Alongside simple target temperature control, it supports detailed, multi-stage fermentation programmes with precise time and temperature settings for the contents. All settings are entered on a touchscreen.

Gärmeister CONTROL has outputs for the cooling solenoid valve. A solenoid valve with two metres of cable, a temperature sensor and a 24 V power cable are included. The WiFi module also allows online monitoring and control via MySpeidel.



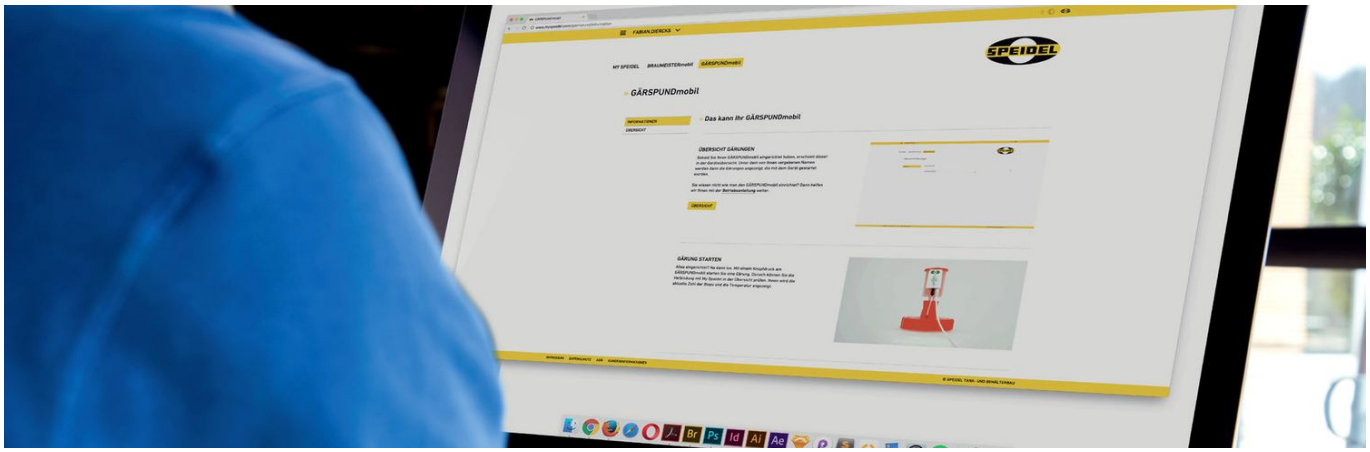

ACCESSORIES FOR EASIER FERMENTATION

Product	Item no.	Price Euro
GÄRSPUNDmobil 2 · **Measures fermentation activity by counting airlock bubbles and measuring temperature** · Optionally receives data from a Tilt Hydrometer (not included) and forwards the readings (Plato) · Sends data via WiFi to your MySpeidel customer portal · Network standard: IEEE 802.11 b/g/n · LEDs indicate device status · Includes mini-USB to USB cable, temperature sensor cable and lid cable feed-through · Includes airlock and stopper	21100	179.00

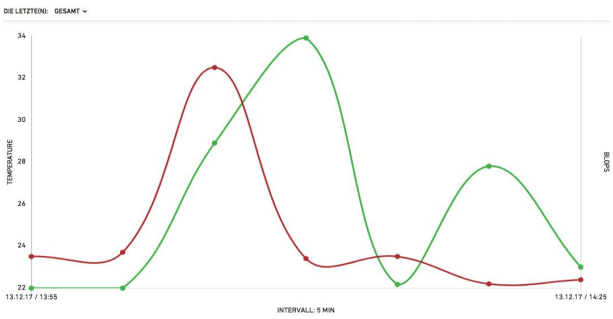

ACCESSORIES FOR EASIER FERMENTATION

Product	Item no.	Price Euro
Gärmeister CONTROL · **Single-tank controller for Speidel stainless steel fermenter with cooling jacket** and temperature sensor thermowell (p. 55, item no. 64071) · Fermentation programme with up to 5 stages (temperature and time/h) · Temperature range: -5 °C to +50 °C · Simple target temperature settings · TFT touchscreen · Rear output for cooling circuit solenoid valve · Includes solenoid valve and 2 m valve cable, temperature sensor and power cable (24 V) · Integrated WiFi module for control and monitoring via MySpeidel · IP65	77283	see online shop



All prices in euros, excluding VAT and shipping

Braumeister add-ons



The new Braumeister lets you use a wide range of add-ons. Additional connections on the back of the controller, integrated WiFi and Bluetooth make numerous accessories possible.

For example, you can cool automatically after hop boiling, ferment directly in the Braumeister or monitor fermentation.

The connections on the back of the controller allow many accessories to be used with the Braumeister.



TILT HYDROMETER AND BRAUMEISTER

The Tilt Hydrometer is a useful addition when fermenting in the Braumeister or a fermentation tank. This wireless device shows Plato readings (fermentation progress) on the Braumeister display. Combined with a solenoid valve and cooling unit, the Tilt can also control fermentation in a tank. It transmits the temperature to the Braumeister controller, which then knows when to open the solenoid valve.

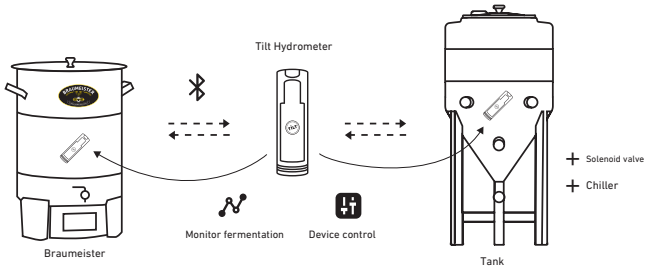

AUTOMATIC COOLING

With a solenoid valve and a hose connected to a tap, the new Braumeister can automatically cool the wort to the desired temperature after hop boiling. The controller monitors the temperature and closes the solenoid valve once the target is reached.

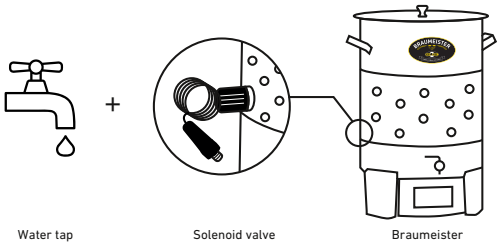

BRAUMEISTER FERMENTATION

With a cooling unit, solenoid valve and fermentation set including an airlock, you can ferment directly in the Braumeister. Its controller manages fermentation and maintains the temperature. During this stage, it never activates the heating elements: it only controls the solenoid valve and the cooling water supply.

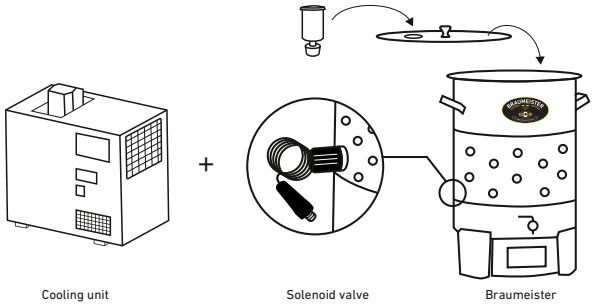

Built to last

The durability of a Braumeister means you can enjoy it for years. Our accessories make brewing even more enjoyable.





Brewing accessories 10 / 20 / 50 litres

BREWING ACCESSORIES

Product		Item no.	Price Euro
Stainless steel hood for Braumeister 10 litres		78035	105.00
Stainless steel hood for Braumeister 20 litres		78032	120.00
Stainless steel hood for Braumeister 50 litres		78033	165.00
Thermal jacket for Braumeister 10 litres · Black		78046	57.00
Thermal jacket for Braumeister 20 litres · Black		78047	65.00
Thermal jacket for Braumeister 50 litres · Black		78048	85.00
Pumping device for Braumeister 20 litres		66712	82.00
Pumping device for Braumeister 50 litres		66713	92.00
Low oxygen brewing set for Braumeister 20 litres · Includes floating lid, filter support ring and knurled nut		66736	90.00
Low oxygen brewing set for Braumeister 50 litres · Includes floating lid, filter support ring and knurled nut		66733	105.00

All prices in euros, excluding VAT and shipping

BREWING ACCESSORIES

Product		Item no.	Price Euro
Shortened malt pipe for Braumeister 20 litres · For a 10 l batch in the 20-litre Braumeister · Lower central rod marking: 12 l · Max. malt quantity: 3 kg · On the Braumeister PLUS, jacket cooling is less effective when working with half the normal wort volume		77421	95.00
Shortened malt pipe for Braumeister 50 litres · For a 25 l batch in the 50-litre Braumeister · Lower central rod markings: 20 l, 25 l, 30 l · Max. malt quantity: 6 kg · On the Braumeister PLUS, jacket cooling is less effective when working with half the normal wort volume		79263	105.00
Plastic mobile base for Braumeister 20 litres · Clean without turning the Braumeister upside down · Sturdy, high-quality polyethylene, anthracite · Mobile on lockable swivel castors · Ideal height for mashing, lautering and cleaning · Raised position for easier pump access · Tray collects residual wort or cleaning water · Drain channel for a floor drain or collection bucket · Includes 3/4" drain connection for a tap (tap not included)		77495	155.00
Plastic mobile base for Braumeister 50 litres · Clean without turning the Braumeister upside down · Sturdy, high-quality polyethylene, anthracite · Mobile on lockable swivel castors · Ideal height for mashing, lautering and cleaning · Raised position for easier pump access · Tray collects residual wort or cleaning water · Drain channel for a floor drain or collection bucket · Includes 3/4" drain connection for a tap (tap not included)		77490	175.00
Solenoid valve for cooling jacket · For connection to the Braumeister · 24 V · 2 m cable		78049	95.00
Fermentation set for Braumeister 10 litres · Lid including clamping ring		77507	93.00
Fermentation set for Braumeister 20 litres · Lid including clamping ring		77493	95.00
Fermentation set for Braumeister 50 litres · Lid including clamping ring		77494	105.00

All prices in euros, excluding VAT and shipping

BREWING ACCESSORIES

Product		Item no.	Price Euro
Hydrometer test cylinder		72897	8.50
Brewing hydrometer · With temperature correction for measuring original gravity		72896	16.00
Large malt scoop		72898	9.00
Cleaning set		78027	45.00
KEG-CIP BM · Attachment for 20/50-litre Braumeister to clean NC and Euro kegs		66820	95.00
Malt mill for Braumeister 10 litres · Mill directly into the malt pipe with almost no dust		66824	345.00
Malt mill for Braumeister 20 litres · Mill directly into the malt pipe with almost no dust		66825	350.00
Malt mill for Braumeister 50 litres · Mill directly into the malt pipe with almost no dust		66826	360.00



All Braumeister models and accessories are available in our online shop at shop.speidels-braumeister.de

All prices in euros, excluding VAT and shipping

Brewing accessories 200 / 500 litres

BREWING ACCESSORIES

Product		Item no.	Price Euro
Thermal jacket for Braumeister 200 litres · Vessel insulation		77357	170.00
Thermal jacket for Braumeister 500 litres · Vessel and lid insulation		77380	290.00
Thermal jacket for Braumeister 1,000 litres · Vessel insulation		77470	490.00
Hydrometer test cylinder		72897	8.50
Brewing hydrometer · With temperature correction for measuring original gravity		72896	16.00
Large malt scoop		72898	9.00
Cleaning set		78027	45.00
Hose set · Coupling with 1" female-thread connection 1 5 m 2 10 m		77363 77366	185.00 285.00
Maltman malt mill with additional hopper and gantry stand · 230 V 50 Hz		77371	3,650.00
120-litre barrel · For crushed malt · Fits directly under the malt mill		21008	92.00

All prices in euros, excluding VAT and shipping

BREWING ACCESSORIES

Product		Item no.	Price Euro
Stainless steel roller tray for Braumeister 200 litres · Supports the malt pipe		66584	300.00
Stainless steel roller tray for Braumeister 500 litres · Supports the malt pipe		66605	560.00
200-litre PE universal tray on castors · For disposing of spent grain, etc. · 126.5 x 85.5 x 46 cm (l x w x h), plus castor height		10103	390.00
Wooden mash paddle		77390	12.00
Autofill filling device NEW · Automatic brewing water filling · Solenoid valve prevents overflow · Filling volume adjustable via the controller · Includes: filling tube with solenoid valve, Gardena adapter and DN 25 adapter. Standard connection: 1".		78050	350.00

IMPORTANT - only for Braumeister 200, 500 and 1,000 litres from model year 2021 onwards.







All prices in euros, excluding VAT and shipping

Fermentation tank accessories

FERMENTATION / MATURATION TANK ACCESSORIES

Product		Item no.	Price Euro
Stainless steel cooling unit MiniCHILLY 03 - 0.3 kW · Compact and mobile on lockable castors · Level indicator and full drainage · Separately switchable circulating pump · Cooling water down to -6 °C with 30% glycol · 230 V / 50 Hz		77524	1,250.00
Cooling unit Chilly 25 - LT 2.2 kW · Temperature: -10 °C to +25 °C · Hose connection set for 240 / 525 / 625 l fermenters and pressure tanks · 230 V / 50 Hz		77498	4,850.00
Gärmeister Control		77283	see online shop
DN 10 screw-in thermowell for thermometer / Gärmeister Control temperature sensor		64071	29.00
Thermometer		63887	34.00
NEW **Mobile base for stainless steel and PE fermenters, 12-120 l** · Ø 350-440 mm · Height +57.6 cm · Weight: 8.2 kg		77497	189.00
Mobile base for FD 60 l / 120 l · Raises the tank by 16 cm		77520	99.00
Mobile base for FD 240 l / Fermentegg 250 l · Raises the tank by 16 cm		77400	130.00

All prices in euros, excluding VAT and shipping

FERMENTATION / MATURATION TANK ACCESSORIES

Product		Item no.	Price Euro
CIP and filling lid for FD fermenters		86162	380.00
Butterfly valve for FD fermenters / pressure tanks · Female-male thread 1", V2A · Supplied without blank cap		87882	105.00
Stainless steel ball valve for FD fermenter / Fermentegg 60 l · Male-male thread 3/4", V2A		75104	52.00
SS ball valve for FD fermenters / pressure tanks · Female-male thread 1", V2A		64939	62.00
Stainless steel ball valve for Fermentegg 250 l / 600 l · Male-male thread 1", V2A		69315	62.00
DN 10 sample tap · Standard version · Without sampling coil option		64949	38.00
Reducer / adapter from 3/4" male to 1" male thread · 3/4" female to 1" female thread		45062	9.00
Airlock and stopper for fermentation tank		21010	5.00
Outlet tap for fermentation barrel		21043	4.50
Thermometer strip		66715	3.50
Stainless steel drain tap · 3/4" male thread with locknuts · V2A		65276	30.00

All prices in euros, excluding VAT and shipping

CIP units

FERMENTATION / MATURATION TANK ACCESSORIES

All-stainless steel CIP unit - 2 x 30 litres

For cleaning by circulation



· Heated 30 l conical tank for caustic solution
· 30 l conical tank for acid
· DIN DN 25 / pump 880 W /
4.5 bar / 4,500 l/h
· 230 V / 50 Hz, mobile on 4 swivel castors

Item no.	Price Euro
77285	5,200.00

All-stainless steel CIP unit - 2 x 60 litres

For cleaning by circulation



· Heated 60 l conical tank for caustic solution
· 60 l conical tank for acid
· DIN DN 25 / pump 880 W /
4.5 bar / 4,500 l/h
· 230 V / 50 Hz, mobile on 4 swivel castors

Item no.	Price Euro
77289	5,650.00

Fermentation tank accessories

FERMENTATION / MATURATION TANK ACCESSORIES

Product		Item no.	Price Euro
DIN 25 hose tail · For 1" hose · DIN 25 union nut		69497	48.00
DIN 25 adapter · DIN 25 to 1" female thread · Perbunan seal 71003		69496	35.00
Butterfly valve with position lock and blank caps with chain · DN 25 DIN 11851		66417	105.00
Gardena plug-in nipple · 1/2" female thread, V2A · 3/4" female thread, V2A · 1" female thread, V2A		66686 89672 66685	13.00 15.00 15.00
Clamp adapter · 1" female thread to DN 25 clamp, V2A · DIN 32676		66702	28.00
Neoprene jacket for universal barrel · For 15-litre universal barrel · For 30-litre universal barrel · For 60-litre universal barrel		94137 94130 94131	25.00 32.00 42.00

All prices in euros, excluding VAT and shipping

Pressure maturation tank accessories

STAINLESS STEEL PRESSURE TANK ACCESSORIES

Product		Item no.	Price Euro
T-adapter · For CO2 connection / shut-off valve and pressure regulator · Two side connections: 3/4" male thread · Bottom DN 25 connection to fitting on tank top		87711	95.00
Pico pressure regulator · Fits the T-adapter · 3/4" female thread / union nut		87712	254.00
CO2 shut-off valve · Fits the T-adapter · Female-male thread 3/4"		87986	28.00
Spray head with holder · DN 10 spray head · DN 25 connection to fitting on tank top			
Hose connection DN 25 Hose connection 1" male thread		94180-02 94180-01	285.00 269.00
DN 10 Zwickel sample tap · Flame-sterilisable tap · Threaded connection for sampling coil		83922	195.00
Sampling coil · For sample tap		83866	98.00
Blank cap 3/4"		64524	12.00
Blank cap DN 25		76493	17.00

All prices in euros, excluding VAT and shipping

Pressure maturation tank accessories

INSULATION

Neoprene jacket for conical pressure tanks



Example of use

Full neoprene insulation for standard Speidel conical pressure tanks rated at 1.2 or 2.5 bar.

· Simple, cost-effective complete insulation
· Easy to fit and remove
· Cut-outs for all connections
· Supplied loose in a PE bag

Product	Diameter mm	Item no.	Price Euro
Neoprene jacket for conical tank For tank 60 litres	350	50133	80.00
Neoprene jacket for conical tank For tank 120 litres	440	50134	120.00
Neoprene jacket for conical tank For tank 240 litres	550	50119	160.00
Neoprene jacket for conical tank For tank 625 litres	820	50131	220.00
Neoprene jacket for conical tank For tank 1,200 litres	1,000	50132	280.00

Keg accessories

MATURATION ACCESSORIES: KEGS

Product		Item no.	Price Euro
18-litre NC beer keg · Large cleaning opening at the top		77377	135.00

Ingredients

BREWING INGREDIENTS

Product		Item no.	Price Euro
Malt kit including hops and yeast for Speidel recipes			
Festbier		77270	see online shop
Pilsner		77273	see online shop
IPA		77274	see online shop

Suggested use

· 1 pack makes 2 batches in the 10-litre Braumeister or 1 batch in the 20-litre Braumeister.
· 2 packs make 1 batch in the 50-litre Braumeister.

Find recipes at www.myspeidel.com

Merchandise

MERCHANDISE

Product		Item no.	Price Euro
"Speidels Braumeister" apron		77389	25.00

All prices in euros, excluding VAT and shipping

Good reasons to choose a Braumeister



Patented malt pipe technology

Our patented malt pipe technology gently circulates the mash from bottom to top using the pump. This provides optimum extraction without constant stirring. The pipework is neatly concealed. Our original concept dates back to 2003 and is patented.

Braumeister PLUS

The welded double jacket on the Braumeister PLUS provides clean, effective cooling and even clearer wort without a cooling coil.

Easy cleaning

Excellent workmanship and our finest welds make cleaning easier. The Braumeister pump can be opened and cleaned by hand. The Braumeister PLUS also has an extra outlet at the base, allowing dirty water to drain easily.

Easy to service

Components such as the controller, pump and sensors are easy to replace using electrical plug connections. This lets you carry out minor repairs yourself.

The new brewing controller

The fully automatic Braumeister controller has a touchscreen. Recipes can be synchronised individually or together via MySpeidel. Its integrated WiFi module means no extra accessories are needed. It can run automatically or manually and includes a brewing start timer. Older Braumeister models require an additional WiFi module to work with MySpeidel.

Always up to date

Regular software updates can be installed via the integrated WiFi module in our Braumeister models.

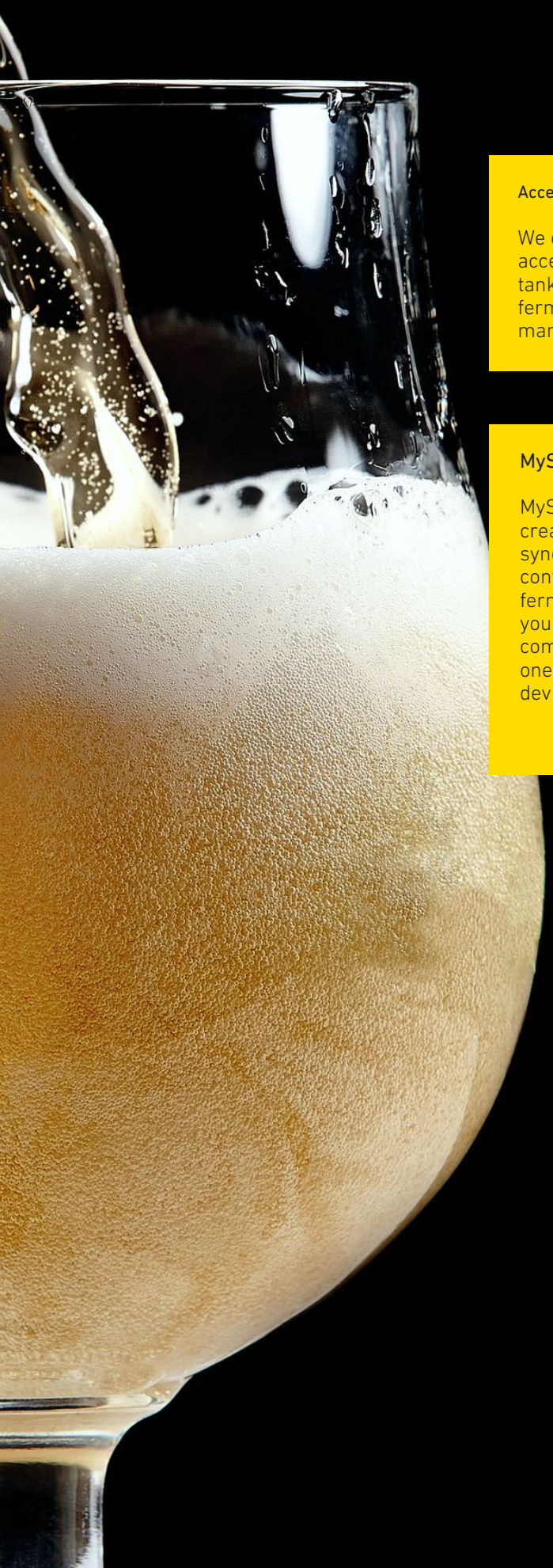

Accessories & fermenters

We offer a wide range of accessories and fermentation tanks for both brewing and fermentation, all manufactured in-house.

MySpeidel

MySpeidel is your portal for creating, managing and synchronising recipes and controlling brewing and fermentation devices. Share your favourite recipes with the community or discover new ones. Manage all your Speidel devices online in one place.

Experience

We have over 100 years of experience in tanks for wine and beer production and over 20 years in small brewing systems. Our expertise shows in practical details, matching accessories and automatic brewing control with a timer.

Worldwide service

We offer customers around the world advice and support by email and telephone, taking the time to find individual solutions.

Made in Germany

Our products are manufactured exclusively in Ofterdingen, Swabia, Germany.

The brewing process

1 Programming
Programme the Braumeister with the times required for your recipe, or synchronise a recipe from MySpeidel. Switching to automatic brewing starts the process. The controller guides you through the steps and runs all four brewing stages automatically.

2 Mashing in
Depending on the recipe and process, fill with water and heat to 38 °C. Insert the malt pipe and filter plates. Pour the malt between the filter plates, then secure the malt pipe with the retaining bar and central rod.

3 Mashing / brewing
The pump starts. The circulating water and wort extract starch from the malt. The four brewing stages follow the selected programme, for example as below (stages may be longer in 200- to 1.000-litre Braumeisters):
1 Protein rest: 55 °C, approx. 5 min
2 Maltose rest: 63 °C, approx. 40 min
3 Saccharification rest: 72 °C, approx. 30 min
4 Saccharification rest: 78 °C, approx. 15 min

4 Lautering
A signal sounds after the four stages. Lautering is quick and easy: lift out the malt pipe. On the 200- and 500-litre Braumeister this is done using the lifting device. Allow it to drain for a few minutes, then remove it. If required, sparge with water for a higher yield.















Each step of the brewing process is described in detail in the operating instructions.

Hop boiling
With the lid open, boil the wort for 80 minutes, adding hops at several stages. Replace evaporated water with fresh brewing water. Adding water, or leaving it out, lets you adjust the original gravity afterwards. The central rod also serves as a level gauge. Another signal sounds when boiling is complete.

Fermentation / maturation
After boiling, cool the wort to pitching temperature as quickly as possible using a wort cooler or, on the Braumeister PLUS and the 200- and 500-litre Braumeisters, the cooling jacket. Add yeast and ferment in a sufficiently large vessel (accessory). After several weeks in bottles or a maturation keg (accessory), the well-chilled beer is ready to taste.

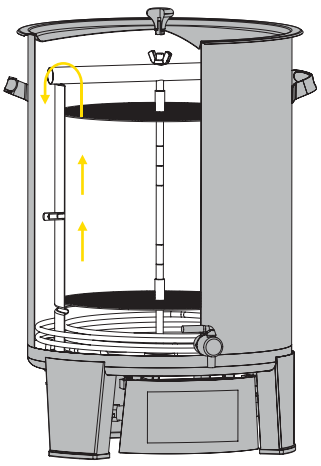

Vessel with malt pipe (brewing)

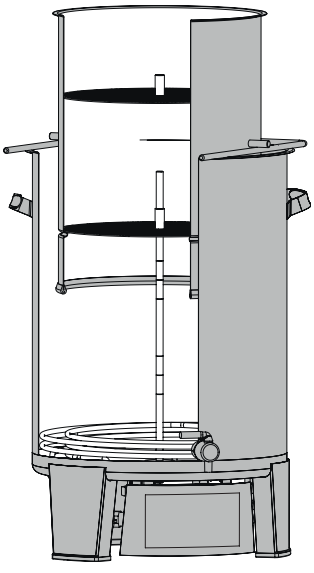

Vessel with malt pipe removed (lautering)

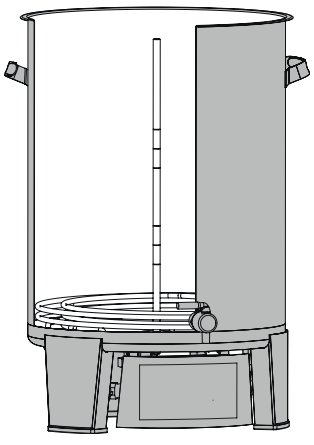

Vessel without malt pipe (hop boiling)

Hops and malt

Hops
Aroma or bittering hops in compressed form. Bitterness is stated as the percentage of alpha acids, usually ranging from 4% to 17%. This is the most common format because it is convenient to store and use.

Whole-cone hops
Aroma or bittering hops in the form of dried cones. Bitterness is stated as the percentage of alpha acids. Whole-cone hops are mainly used to add aroma towards the end of brewing.

Hop pellets may not look as attractive as whole cones, but they are easy to measure out.

1



2





3



4



5



6



7



8



Pilsner malt (EBC 2-3)
For all pale beers, or as a base malt for speciality beers.
· Pilsners
· Any other beer style

Munich malt (EBC 15-20)
Enhances characteristic beer flavour and aroma, and produces a rich colour.
· Malt beers
· Festbiers
· Strong beers

Vienna malt (EBC 7-9)
Produces golden beers and enhances body.
· Export lager
· Märzen
· Festbier
· House beers

Pale wheat malt (EBC 3-5)
Promotes the typical top-fermented aroma. Produces crisp, lively beers and highlights the characteristic wheat flavour.
· Wheat beers
· Kölsch
· Altbier
· Low-gravity top-fermented beers
· Light beers

Carapils malt (EBC 3-5)
Improves foam, head retention and body.
· Pilsners
· Light beers
· Alcohol-free beers

Smoked malt (EBC 3-6)
Produces the characteristic smoky flavour.
· Smoked beers
· Lagers
· Kellerbier
· Speciality beers
· Wheat beers

Cost calculation Braumeister 200 litres

The following approximate cost calculation applies to one 200-litre batch of beer.

These are approximate values for Germany.

Ingredient, electricity and tax costs depend on local conditions in each country.

Labour costs are not included.

CALCULATION EXAMPLE	
Malt + hops	90.00 Euro
Electricity (brewing only, no cooling)	12.00 Euro
Water	10.00 Euro
Beer duty	17.00 Euro
Total	129.00 Euro
Per litre	**0.65 Euro**

Example based on 2026 costs. Not a forecast for 2027.



Legal information

500 litres per calendar year

Duty-free for personal consumption at home

Homebrewers in Germany

Since 1 January 2025, homebrewers may produce up to 5 hectolitres, or 500 litres of beer, per calendar year in their household without paying beer duty. The beer must be intended solely for personal consumption and must not be sold.

The former requirement to notify the authorities before the first brew no longer applies to this production. Beer made in non-commercial communal brewhouses is treated in the same way as beer made at home.

Quantities above the duty-free allowance

If the allowance is exceeded, a tax return must be submitted using the prescribed official form. The relevant main customs office is responsible.

Commercial brewing and sales

The homebrewer allowance does not apply to beer produced for sale. For commercial brewing, clarify the tax requirements with the relevant main customs office.

Current information

www.zoll.de | German Beer Duty Regulation, § 41

Legal position checked on 08.09.2026. Subject to changes before the 2027 edition.

Brewing recipes

Festbier - Braumeister 20 litres

Ingredients
23 l brewing water to start, plus sparging water
2.0 kg Pilsner malt
2.5 kg Munich malt
0.5 kg Carapils
40 g Tettnanger hops (4.2% alpha)
1 pack Saflager S-23 yeast

Method
Mash schedule
1 60 °C > mash in
2 63 °C > 25 min
3 73 °C > 40 min
4 78 °C > 10 min
5 Boil > 80 min
Hop additions
30 g Tettnanger > 70 min before the end
10 g Tettnanger > 10 min before the end
Original gravity
12 °P at 21 l
Fermentation
Ferment at approx. 12 °C
Maturation
2-3 days at room temperature, then 3-4 weeks in the refrigerator at 5 °C

Smoked beer - Braumeister 20 litres

Ingredients
23 l brewing water to start, plus sparging water
2.70 kg Munich malt
1.35 kg smoked malt
0.45 kg Carapils
25 g Hallertauer hops (4.2% alpha)
1 pack Saflager WB 34/70 yeast

Method
Mash schedule
1 60 °C > mash in
2 63 °C > 20 min
3 73 °C > 30 min
4 78 °C > 5 min
5 Boil > 80 min
Hop additions
20 g Hallertauer > 70 min before the end
5 g Hallertauer > 10 min before the end
Original gravity
12 °P at 21 l
Fermentation
Ferment at approx. 12 °C
Maturation
2-3 days at room temperature, then 3-4 weeks in the refrigerator at 5 °C





Tip: the hood also makes an excellent funnel when adding malt.

IPA - Braumeister 20 litres

Ingredients
23 l brewing water to start, plus sparging water
4.0 kg Pale Ale malt
0.5 kg Carapils
50 g Centennial hops (12.3% alpha)
100 g Cascade hops (6.8% alpha)
1 pack Safale US-05 yeast

Method
Mash schedule
1 63 °C > mash in
2 63 °C > 70 min
3 73 °C > 5 min
4 78 °C > 5 min
5 Boil > 80 min
Hop additions
25 g Centennial > 70 min before the end
25 g Centennial > 55 min before the end
40 g Cascade > 40 min before the end
30 g + 30 g Cascade > end of boil + cooling
Original gravity
12 °P at 21 l
Fermentation
Ferment at approx. 22 °C
Maturation
2-3 days at room temperature, then 2-3 weeks in the refrigerator at 5 °C

Find more brewing recipes at www.speidels-braumeister.de or www.myspeidel.com.

10-2026
2027



Tanks made with passion

Speidel Tank- und Behälterbau GmbH
Krummenstraße 2
72131 Ofterdingen
Phone +49(0)7473 9462-0
Fax +49(0)7473 9462-99
verkauf@speidel-behaelter.de

Do you know all SPEIDEL products?



www.speidel-edelstahlbehaelter.de



www.speidels-hausmosterei.de



www.speidel-regenwasser.de

www.speidels-braumeister.de

MADE IN GERMANY

Prices and technical specifications are subject to change.